Model No. 6412 DRILL 10MM

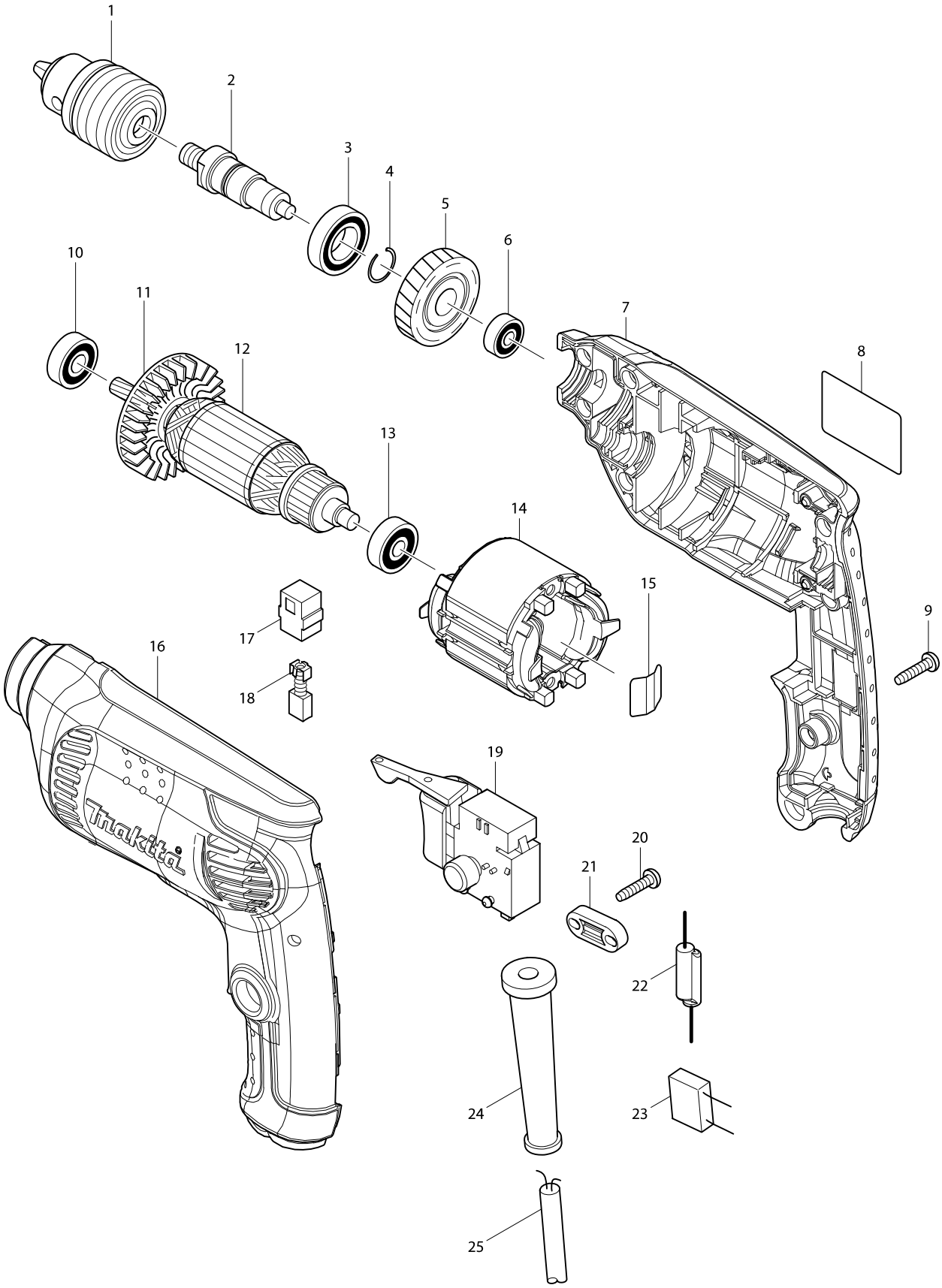

Model No. 6412 DRILL 10MM

Item	Parts No.	Description	I/C	Qty	N/O	Sales	Purch.	Note
001	193706-8	DRILL CHUCK S10		1				
002	324376-4	SPINDLE		1				
003	211242-3	BALL BEARING 6902ZZ		1				
004	233925-5	RING SPRING 13		1				
005	226578-7	HELICAL GEAR 35		1				
006	210028-2	BALL BEARING 606ZZ		1				
007	188277-8	HOUSING SET		1				
C10	263002-9	RUBBER PIN 4		2				
D10		INC. 16						
008	863394-2	6412 NAME PLATE		1				
009	266326-2	TAPPING SCREW 4X18		7				
010	211032-4	BALL BEARING 608ZZ		1				
011	240066-0	FAN 52		1				
012	518890-2	ARMATURE ASS'Y 220V		1				
D10		INC. 10,11,13						
013	210030-5	BALL BEARING 627ZZ		1				
014	593643-0	FIELD ASS'Y 220V		1				
C10	654037-5	INSULATED TERM. FT1.25-M3		1	*			
C11	654037-5	INSULATED TERM. FT1.25-M3	O	1				
015	232210-3	LEAF SPRING		1				
016	188277-8	HOUSING SET		1				
C10	263002-9	RUBBER PIN 4		2				
D10		INC. 7						
017	643563-9	BRUSH HOLDER 5X8		2				
018	191627-8	CARBON BRUSH CB-64		1				
019	650586-0	SWITCH DGQ-1104H		1				
020	266326-2	TAPPING SCREW 4X18		2				
021	687123-7	STRAIN RELIEF		1				
024	682569-2	CORD GUARD 8-85		1				
025	692006-8	POWER SUPPLY CORD 1.0-2-2.0		1				
A01	418163-2	KEY HOLDER 10		1				
A02	763444-2	CHUCK KEY S10		1				

Please order the parts with a part number.

Print Date 04/10/2016