Model No. DDA350 CORDLESS ANGLE DRILL 10MM

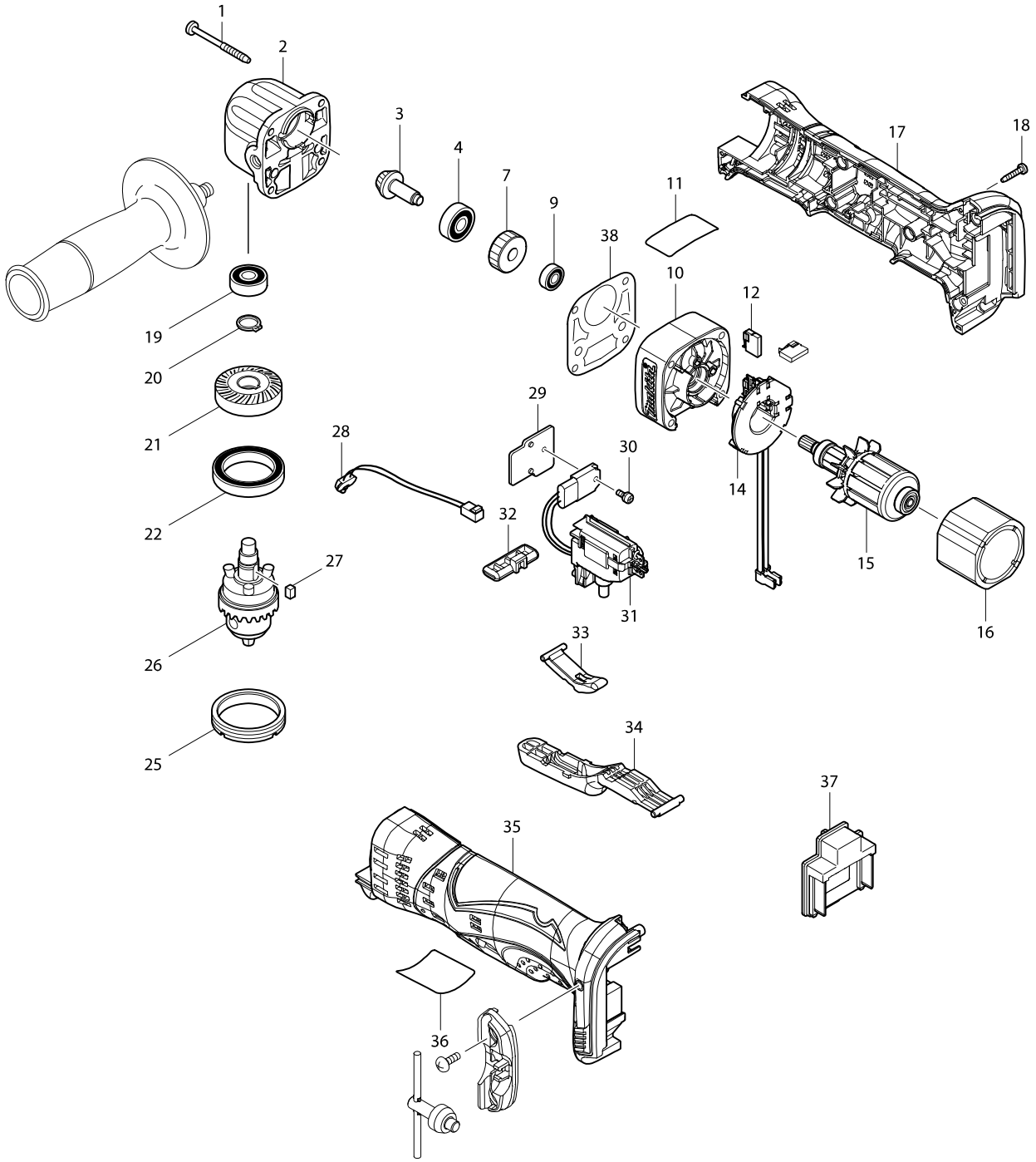

Model No. DDA350 CORDLESS ANGLE DRILL 10MM

Item	Parts No.	Description	I/C	Qty	N/O	Sales	Purch.	Note
001	266069-6	TAPPING SCREW 4X45		4				
002	317635-3	GEAR HOUSING		1				
003	227436-0	SPIRAL BEVEL GEAR 9		1				
004	210029-0	BALL BEARING 608ZZ		1				
007	227230-0	SPUR GEAR 29		1				
009	210033-9	BALL BEARING 696ZZ		1				
010	450607-6	GEAR HOUSING COVER		1				
012	194427-5	CARBON BRUSH CB-440		1				
014	539189-2	BRUSH HOLDER ASSY		1				
D10		INC. 12						
015	619234-0	ARMATURE		1				
016	638613-3	YOKE UNIT		1				
017	187130-5	HOUSING SET		1				
D10		INC. 35						
018	266130-9	TAPPING SCREW BIND PT 3X16		5				
019	210029-0	BALL BEARING 608ZZ		1				
020	961052-5	RETAINING RING S-12		1				
021	227536-6	SPIRAL BEVEL GEAR 26		1				
022	211423-9	BALL BEARING 6806DDW		1				
025	285842-5	BEARING RETAINER 36-43		1				
026	763174-5	DRILL CHUCK S10		1				
027	254201-4	KEY 4		1				
028	631814-2	LED CIRCUIT		1				
029	689098-6	HEAT SINK		1				
030	911006-2	PAN HEAD SCREW M3X8		1				
031	632B91-1	SWITCH UNIT		1				
032	450610-7	F/R CHANGE LEVER		1				
033	450609-2	LINK		1				
034	450608-4	SWITCH LAVER		1				
035	187130-5	HOUSING SET		1				
D10		INC. 17						
036	815P22-1	DDA350 NAME PLATE		1				
037	644808-8	TERMINAL		1				
038	418036-9	GASKET		1				
A01	153489-2	GRIP 36 COMPLETE		1				
A02	251314-2	+ SCREW M4X12		1				
A03	450688-0	KEY HOLDER		1				
A04	763415-9	CHUCK KEY S10		1				

Please order the parts with a part number.

Print Date 28/09/2016